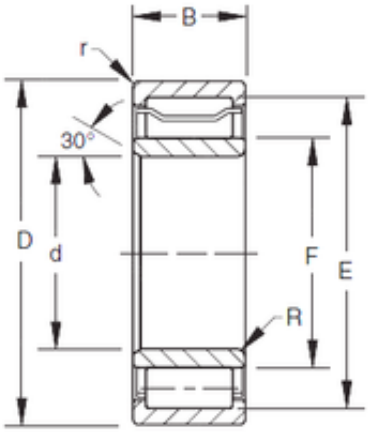

A-5232-WS Bearing 2D drawings and 3D CAD models

Bearing A-5232-WS

Bearing No. A-5232-WS

Bore Diameter	160 mm
Outer Diameter	268 mm
d	160 mm
F	190 mm
D	290 mm
E	268 mm
B	98,425 mm
C	98,425 mm
R	6,4 mm
r	2,5 mm